60.20031.24

Swing door hinge 8653 without stop for frame profile, with shortened counter plate

Material:	aluminium
Finish:	inox effect
Mounting:	glass/wall 90°
Glass thickness:	8 - 10 mm
Sales unit (SU):	St
Unit package:	2.00
Shape:	square
Carrying capacity:	60 kg/pair

max. Flügeltürbreite 1000 mm

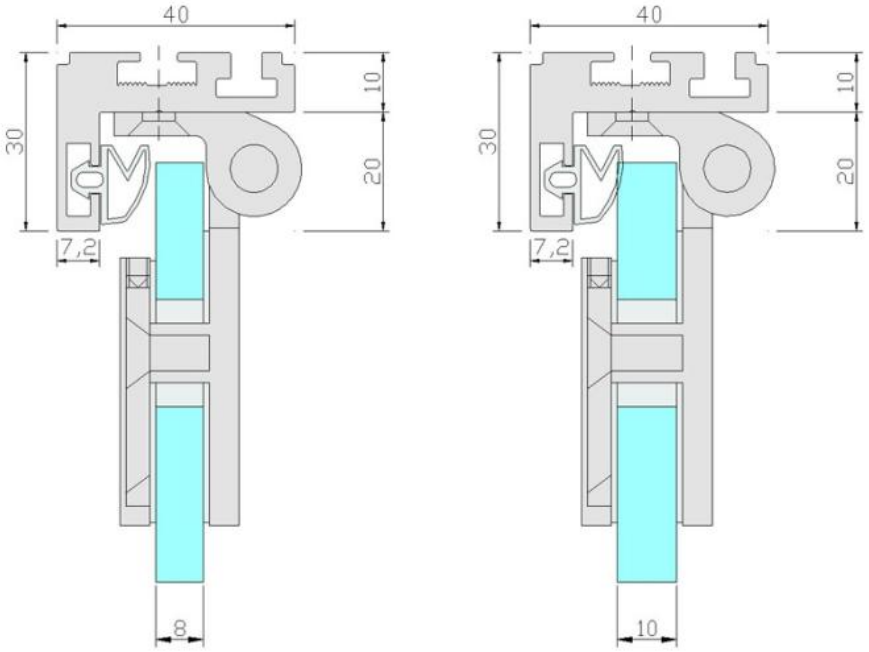
40
30
10
20
7,2
8
40
30
10
20
7,2
10

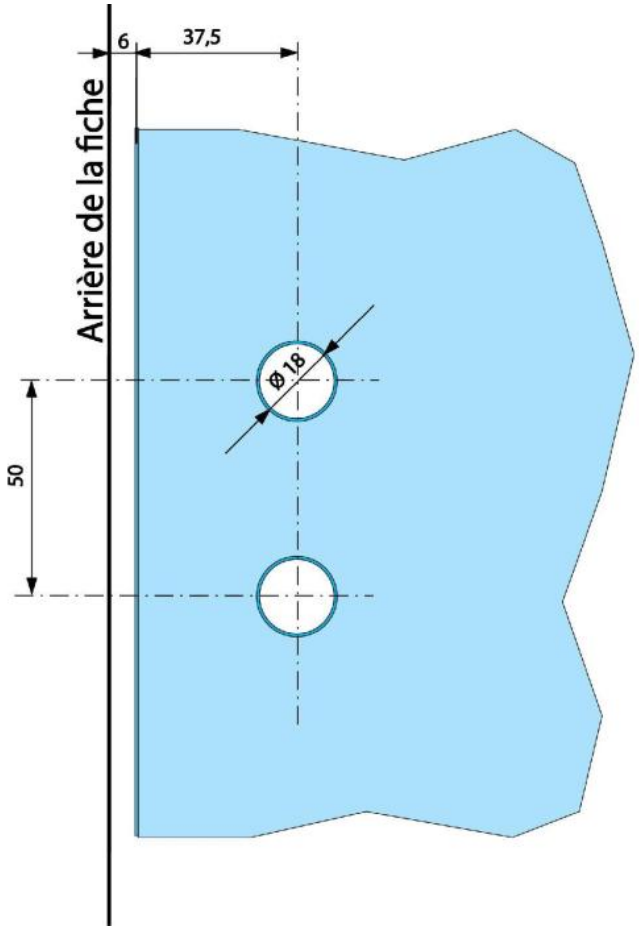
6
37,5
Arrière de la fiche
Ø18
50