29.70165.02

Duschtürscharnier BO 381

Material:	brass
Finish:	matt velour
Mounting:	glass/wall 90°
Glass thickness:	6 mm
Sales unit (SU):	St
Unit package:	2.00
Shape:	square
Carrying capacity:	30 kg/pair

flächenbündige Verschraubung, 90° Öffnungsradius in beide Richtungen

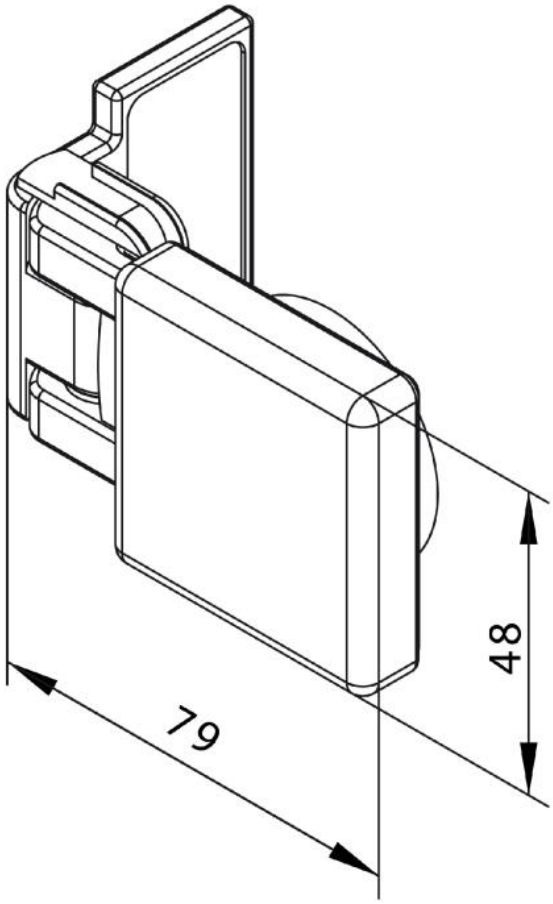

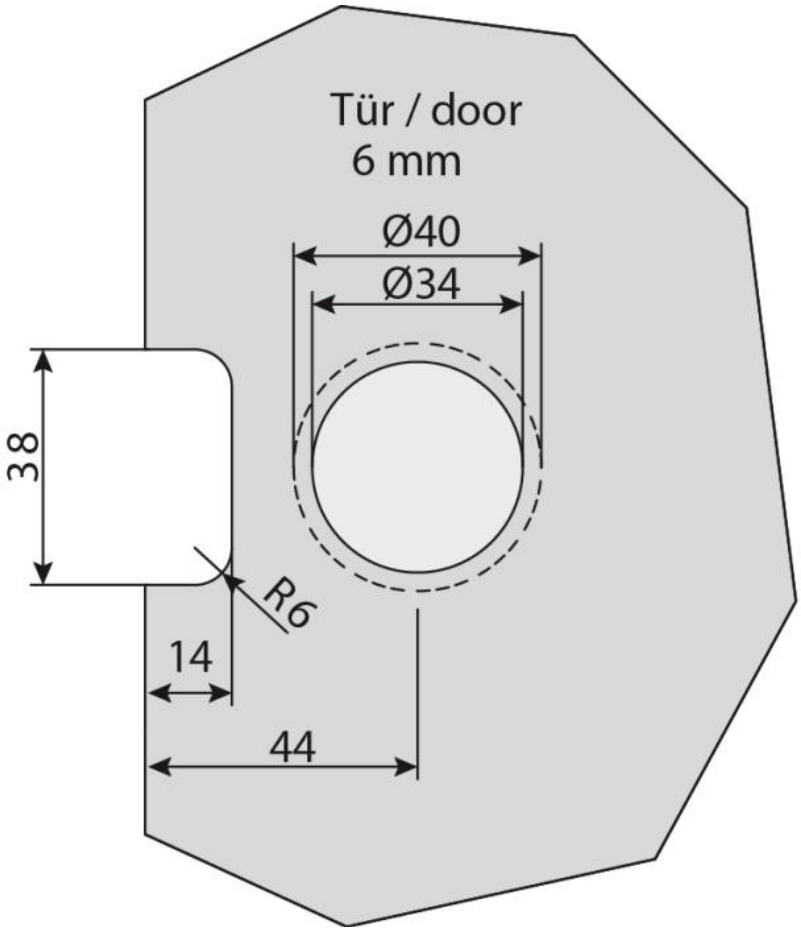
Tür / door
6 mm
Ø40
Ø34
38
R6
14
44

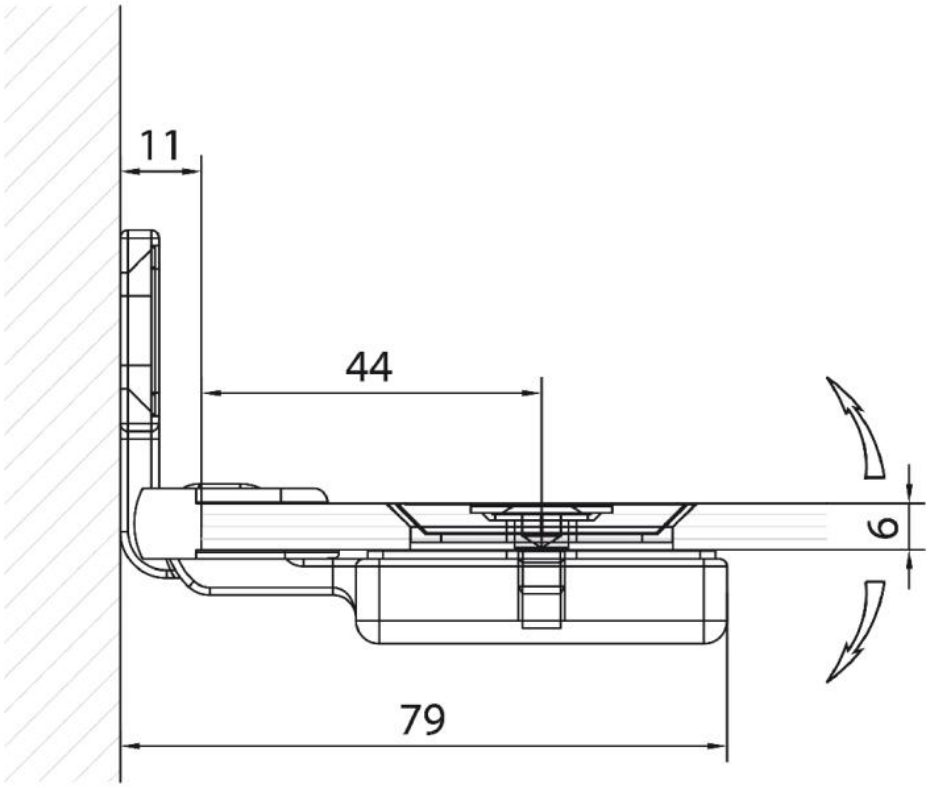
11
44
6
79

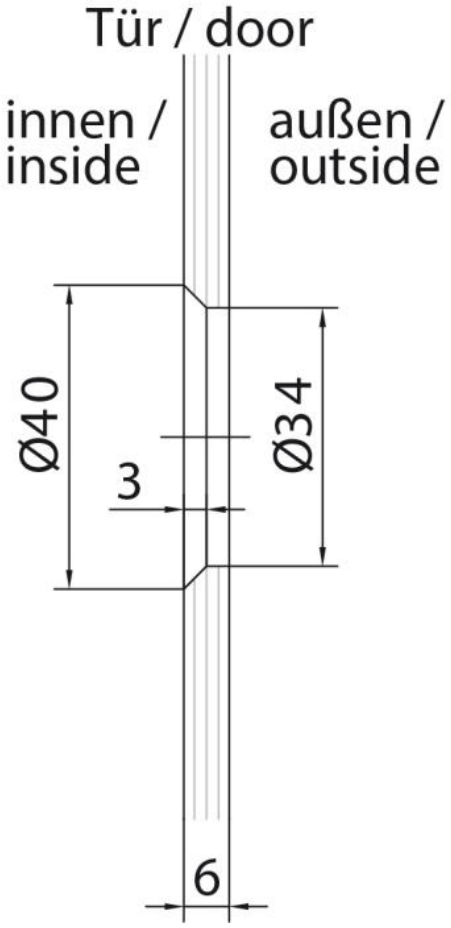
Tür / door
innen /
inside
außen /
outside
Ø40
Ø34
3
6