23.04001.01

Stabilisation bar with clamp holder fix

Material:	brass
Finish:	chrome polished
Mounting:	glass/wall
Glass thickness:	8 - 12 mm
Sales unit (SU):	St
Unit package:	1.00
Measures:	Ø 19 mm
Bar length (L):	600 mm

without glass drilling, tube (length 600 mm) can be shortened as required, with 1 end piece with clamp and 1 fixing bracket for wall connection, brass fittings, aluminium tube

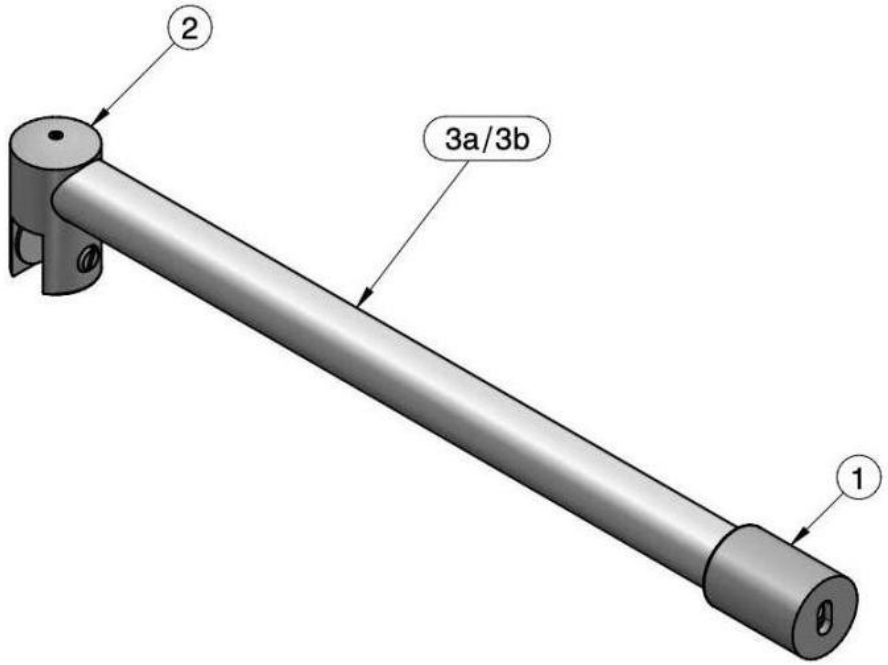

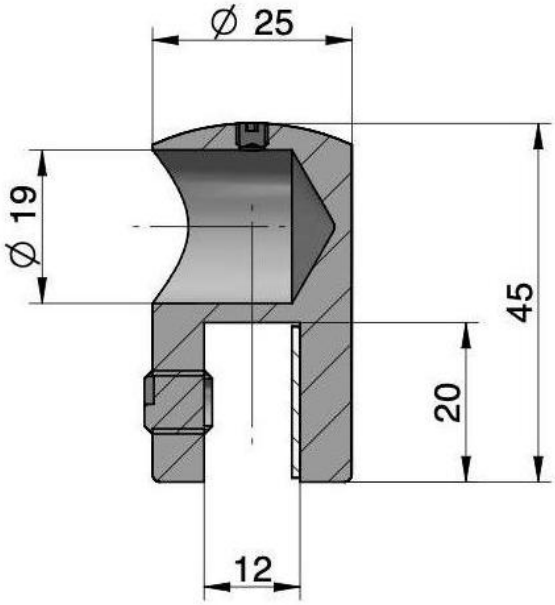
∅ 25
∅ 19
45
20
12

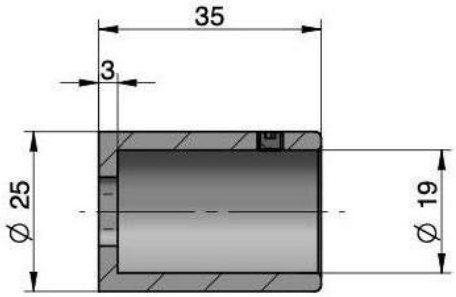
35
3
∅ 25
∅ 19