02.71204.99

Glas-Stärke-Messer für eingebaute Elemente, GLAS-O-METER

Material:	several materials
Finish:	white
Sales unit (SU):	St
Unit package:	1.00

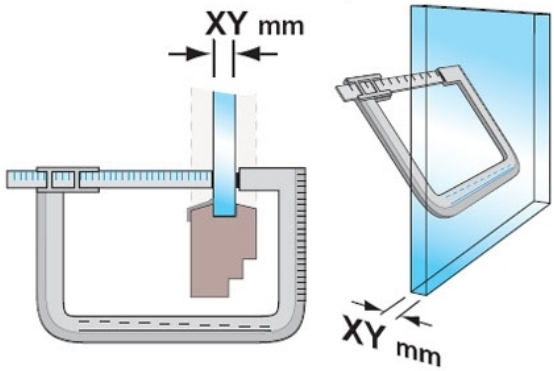
XY mm
XY mm