60.30231.12

Winkelverbinder Synera

Material:	inox V4A
Finish:	brushed
Mounting:	glass/wall 90°
Glass thickness:	8 - 10 mm
Sales unit (SU):	St
Unit package:	1.00
Shape:	square
Glass processing:	Notch
Carrying capacity:	45 kg/pair

geeignet bei agressiven Umwelteinflüssen wie z.b. Schwimmbäder, Dampfbäder, Meernähe usw.

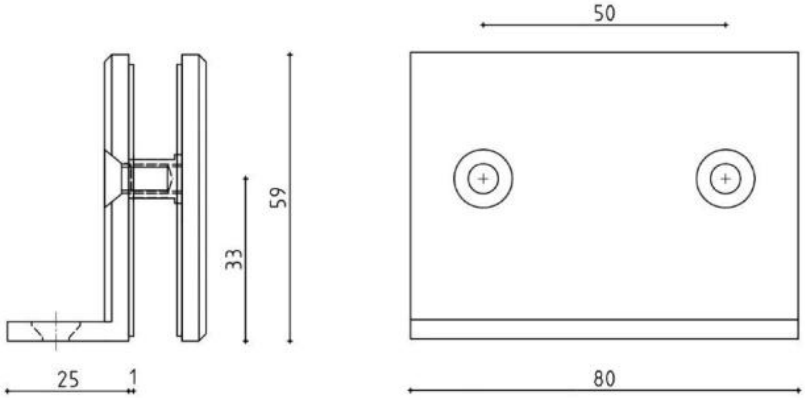

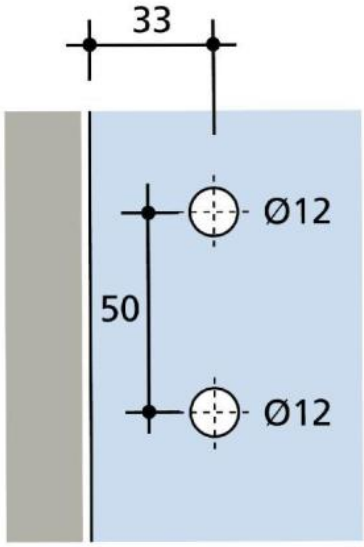

Glass cut-out

Entaille