44.35620.33

Duschtürscharnier Mélora

Material:	zinc die cast
Finish:	golden polished PVD
Mounting:	glass/glass 180°
Glass thickness:	8 / 10 mm
Sales unit (SU):	St
Unit package:	1.00
Shape:	rounded off
Measures:	90 x 120 mm
Carrying capacity:	60 kg/pair

mit Arretierung 90° in beide Richtungen, verstellbar

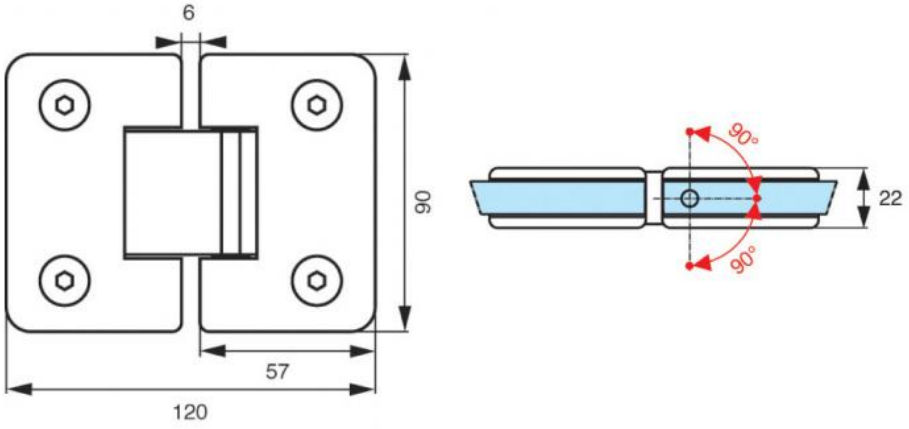
6
90
57
120
90°
90°
22

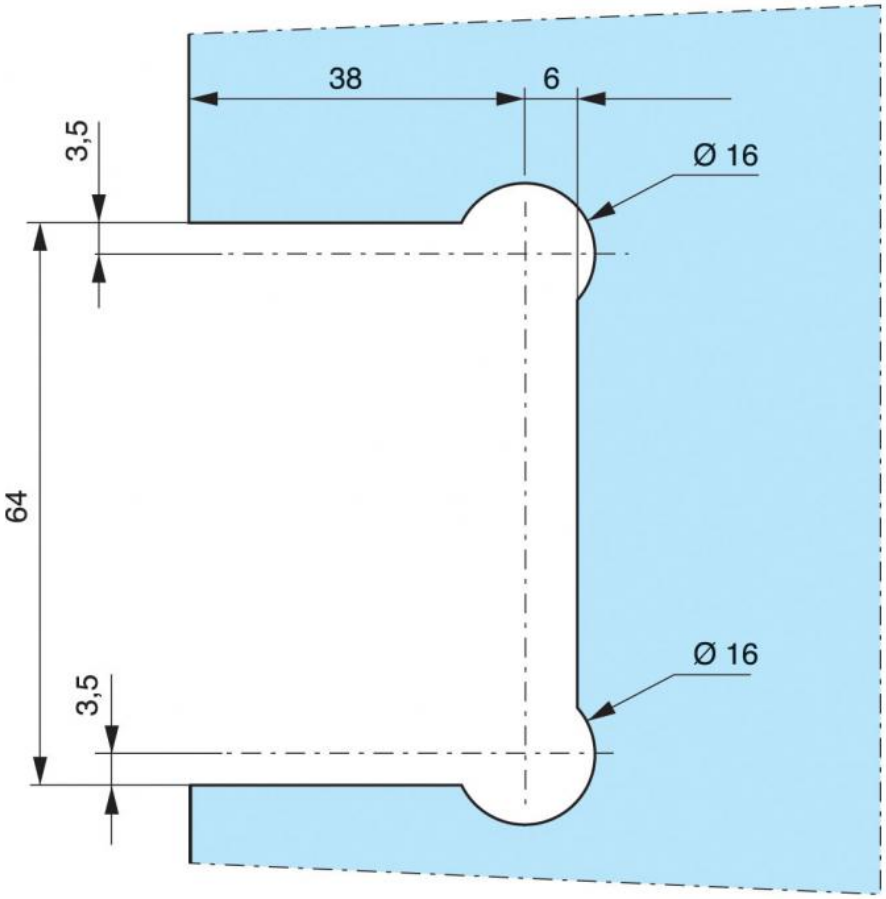
38
6
3,5
Ø 16
64
3,5
Ø 16