62.63492.04

Glastüranschlag

Material:	brass
Finish:	inox effect
Sales unit (SU):	St
Unit package:	1.00
Shape:	cuboid
Measures:	100 x 15 x 15 mm

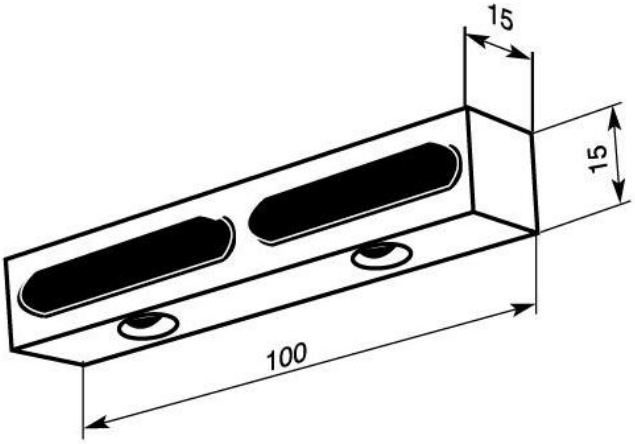
15
15
100