78.21420.16

Distanzhalter

Material:	inox V2A
Finish:	brushed
Glass thickness:	8 - 19 / 21.52 / 25.52 mm
Sales unit (SU):	St
Unit package:	1.00
Measures:	Ø 42 / 25 - 100 mm
Thread:	M8

mit Bohrung im Glas Ø 14 mm

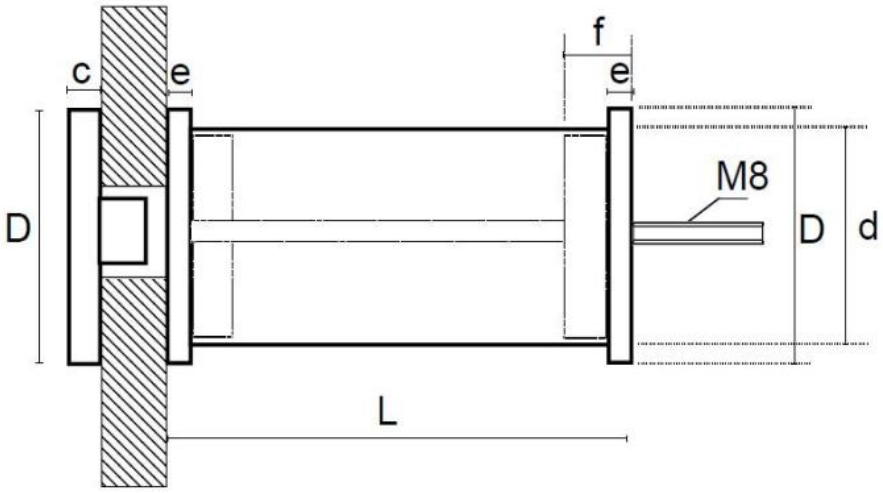
c
e
f
e
D
M8
D
d
L