31.80304.27

Hydraulic hinge EVO EV 835E11 N with integrated door closer, self-closing from an opening angle of 160°

Material:	aluminium
Finish:	black anodized
Mounting:	glass/wall, DIN left
Glass thickness:	8 - 19 / 21.52 mm
Sales unit (SU):	St
Unit package:	1.00
Carrying capacity:	120 kg/pair

can be installed on doors with frame profile, rebate depth 30 - 50 mm, with adjustable closing speed, with constant braking control, with 180° locking, min. door width 800 mm, max. door width 1200 mm, for temperatures from -15°C to + 40°C. The hinge has a pre-tension, therefore a closing stop is required

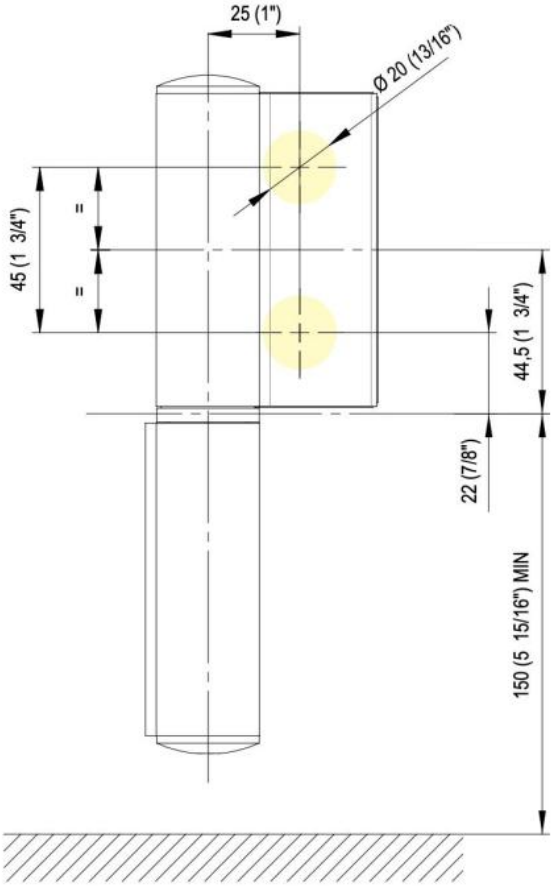
25 (1")
Ø 20 (13/16")
45 (1 3/4")
=
=
44,5 (1 3/4")
22 (7/8")
150 (5 15/16") MIN

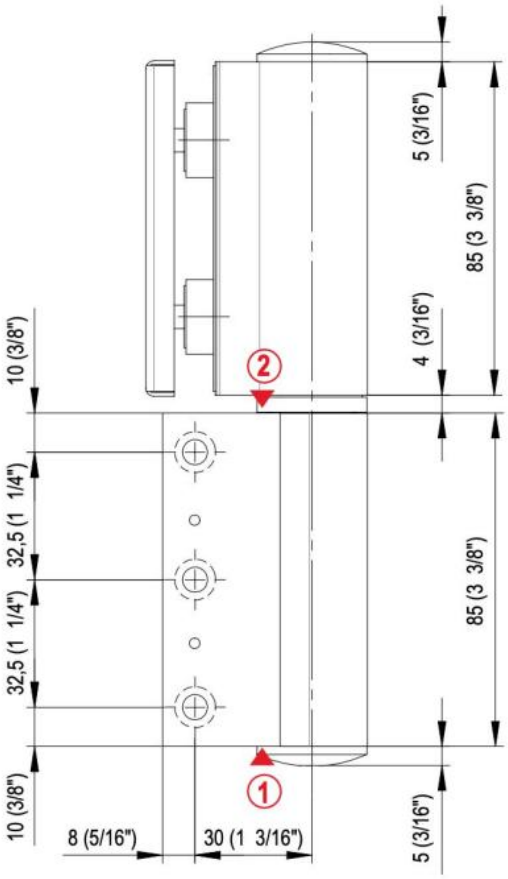

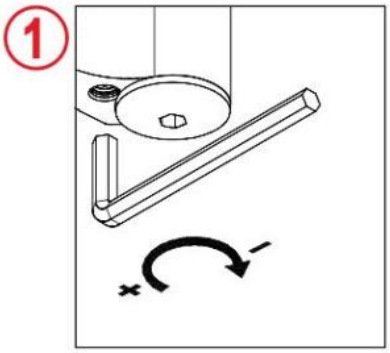

Regolazione scatto finale
Ajuste del resorte final
Final latch adjustement
Regulierung der Endschwung
Réglage de verouillage final

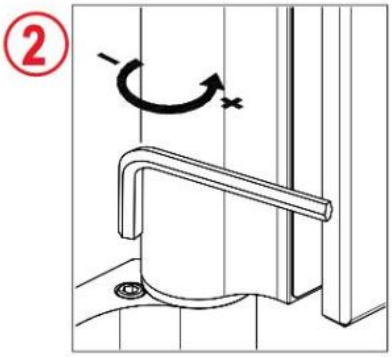

Regolazione della velocità di chiusura
Ajuste de la velocidad de cierre
Closing speed adjustement
Regulierung der Schließgeschwindigkeit
Réglage de la vitesse de fermeture

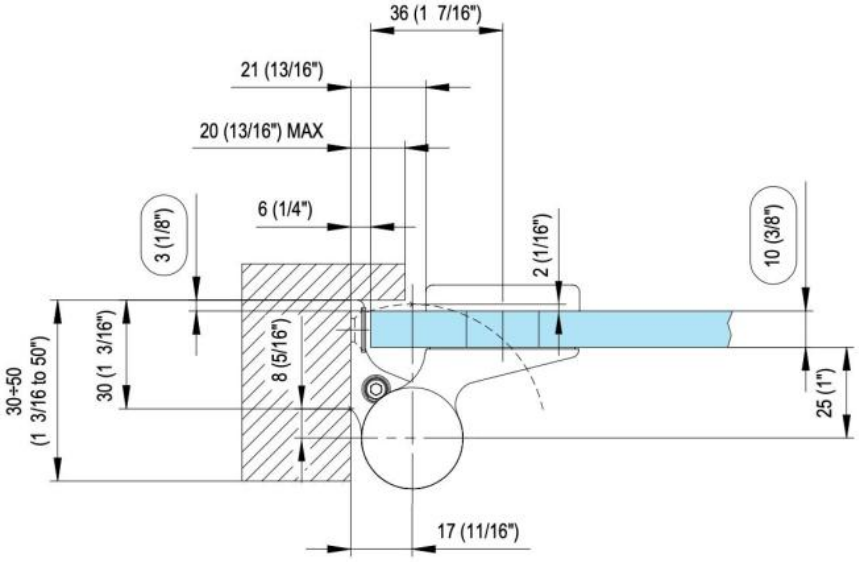
36 (1 7/16")
21 (13/16")
20 (13/16") MAX
6 (1/4")
3 (1/8")
2 (1/16")
10 (3/8")
30÷50
(1 3/16 to 50")
30 (1 3/16")
8 (5/16")
25 (1")
17 (11/16")