15.07830.07

Shower door hinge Milano Original

Material:	brass
Finish:	BlackLine RAL 9005 matt
Mounting:	glass/glass 180°
Glass thickness:	8 / 10 mm
Sales unit (SU):	St
Unit package:	1.00
Shape:	square
Carrying capacity:	50 kg/pair

opening on both sides, concealed screw connection, prepared for 8 mm toughened safety glass, max. door size 800 x 2250 mm or 50 kg/pair, infinitely adjustable in the zero position (latching)

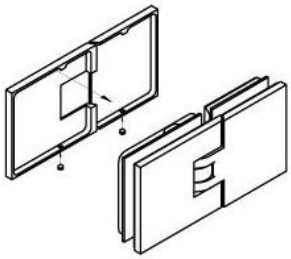

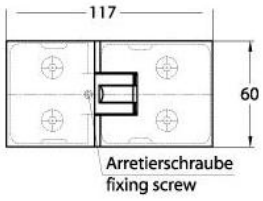

Ohne Dichtprofil / sans joint

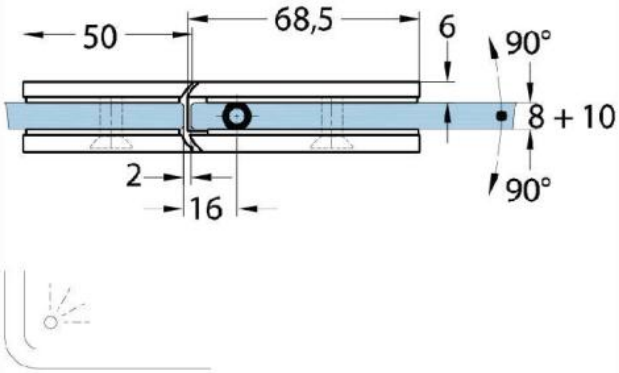

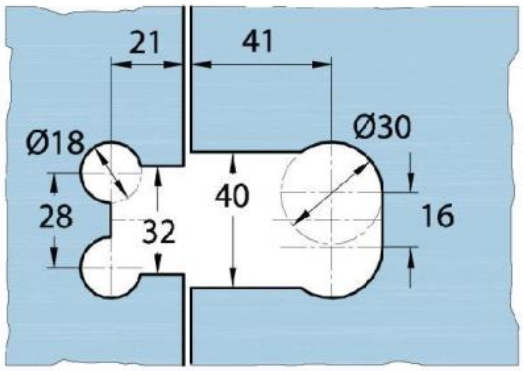

Mit Dichtprofil / avec joint

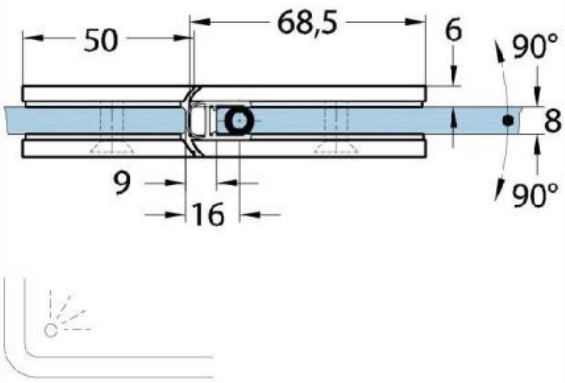

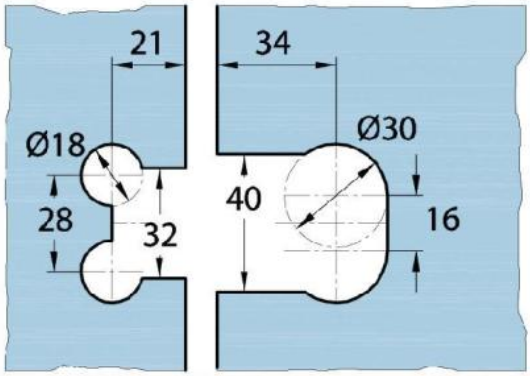

Mit Dichtprofil / avec joint

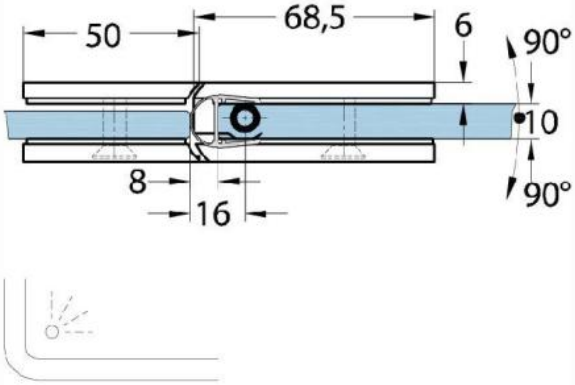

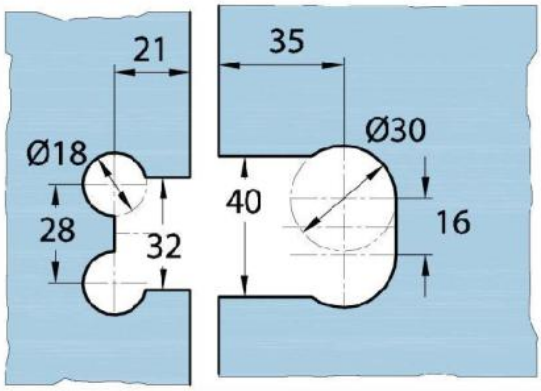
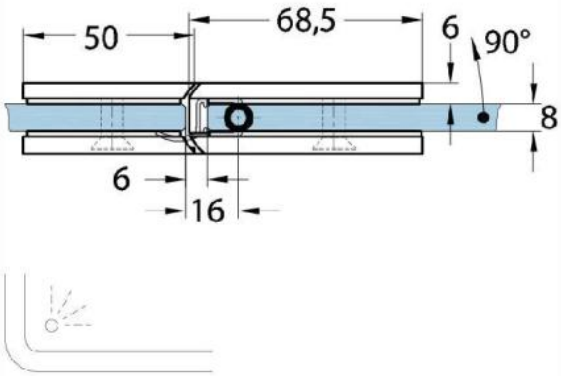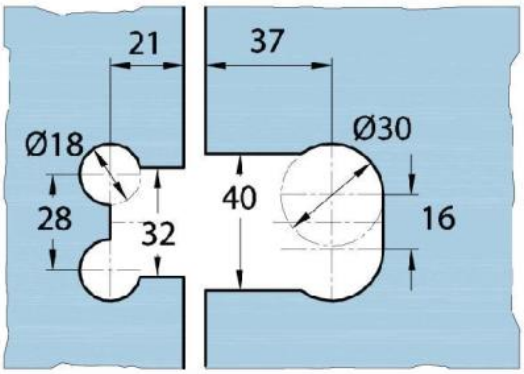
Mit Dichtprofil / avec joint