29.70187.31

Shower door knob BF 112 / BH 112

Material:	zinc die cast
Finish:	chrome polished
Mounting:	glass assembly (pair)
Glass thickness:	8 mm
Sales unit (SU):	St
Unit package:	1.00
Carrying capacity:	45 kg/pair

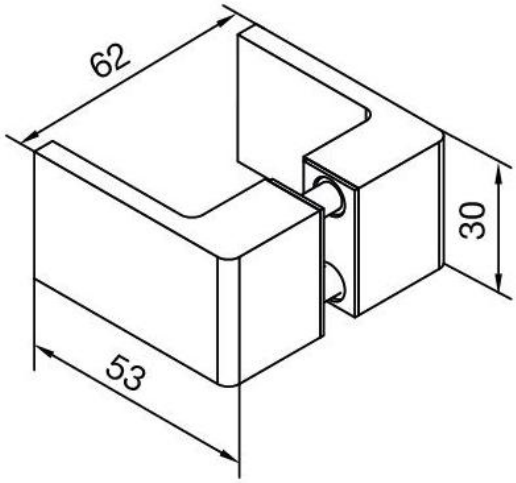
62
30
53

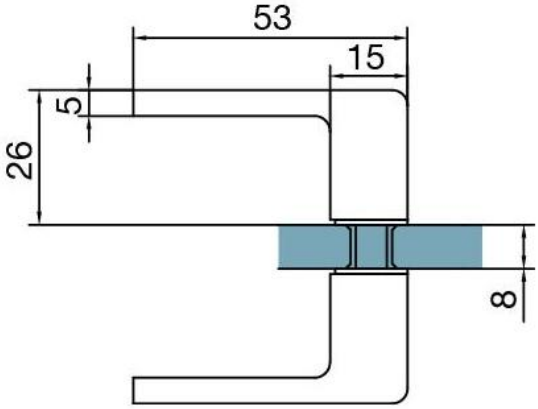
53
15
5
26
8

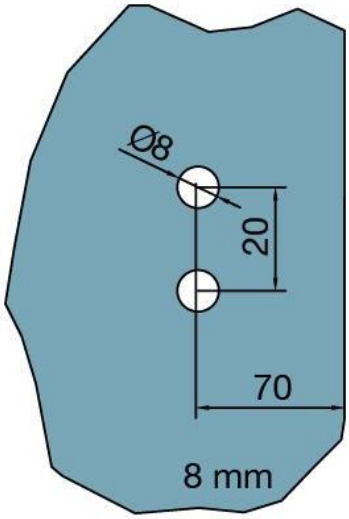

Tür I porte