18.80021.22

Atrivant 80, high ceiling track, 5-lane

Material:	aluminium
Finish:	natural anodized EV1
Mounting:	ceiling assembly
Sales unit (SU):	St
Unit package:	1.00
Bar length (L):	3996 mm
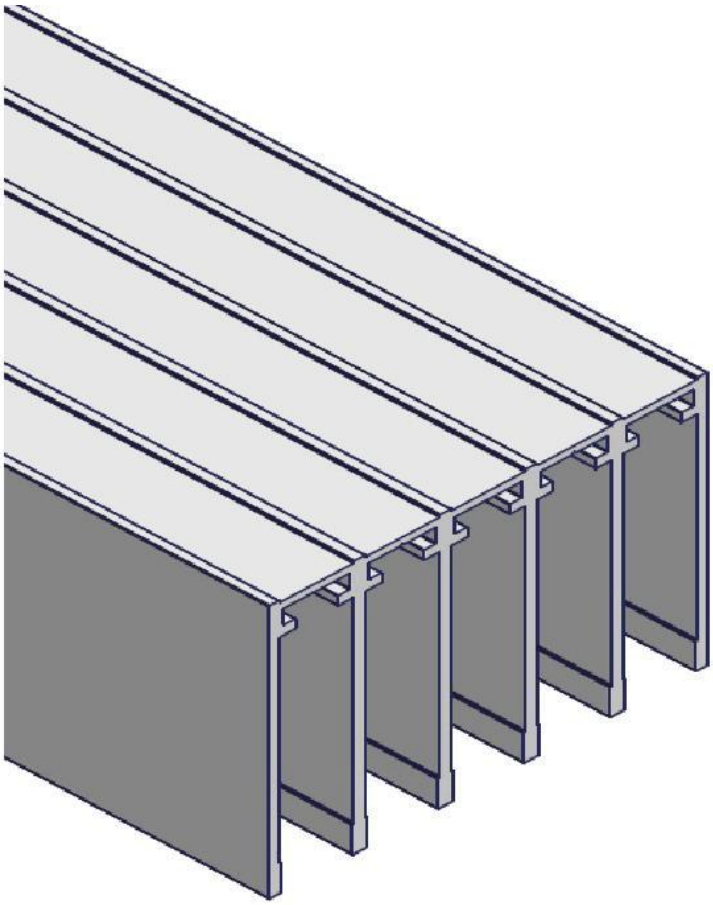
for systems with COMFORT STOP & PERFECT CLOSE. Mandatory accessories: Self-adhesive brush strip for high ceiling track