29.70180.07

Shower door hinge BF 112

Material:	brass
Finish:	BlackLine RAL 9005 matt
Mounting:	glass/wall
Glass thickness:	8 mm
Sales unit (SU):	St
Unit package:	2.00
Carrying capacity:	45 kg/pair

multiple and infinitely adjustable zero position, self-closing function from 20° (inside / outside), invisible screw connection

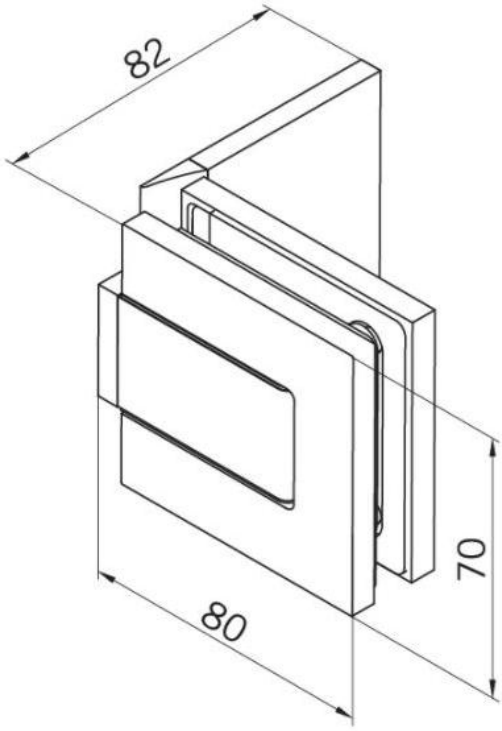
82
70
80

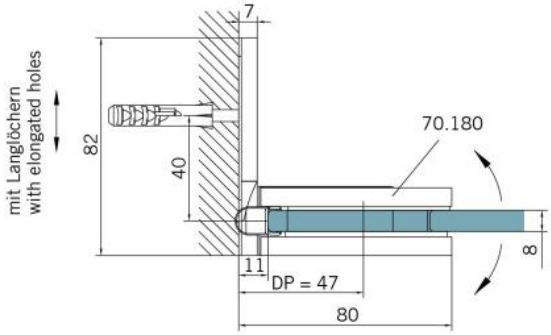
mit Langlöchern
with elongated holes
7
82
40
70.180
8
11
DP = 47
80

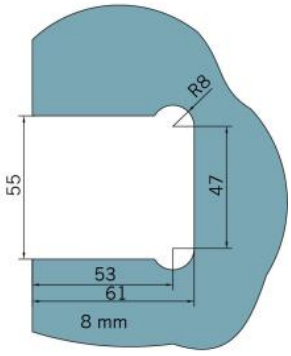
R8
55
47
53
61
8 mm

Tür I door

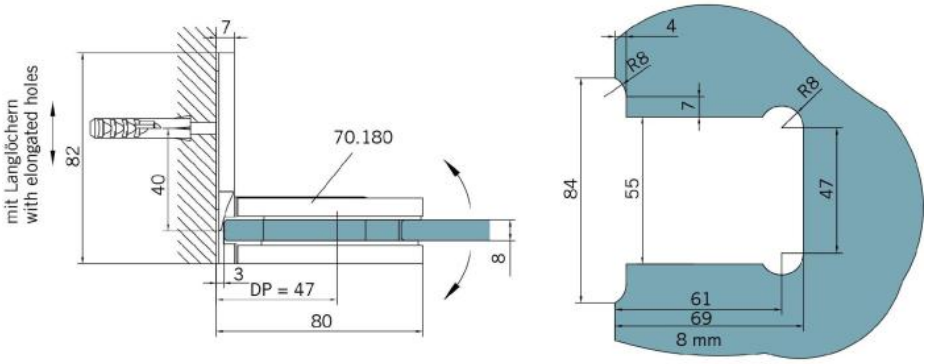
mit Langlöchern
with elongated holes
82
40
7
3
DP = 47
80
70.180
8
4
R8
7
R8
84
55
47
61
69
8 mm

Tür I door