15.07497.04

Connector Milano Original / Premium Original with cover

Material:	brass
Finish:	inox effect
Mounting:	glass/wall 180°
Glass thickness:	8 mm
Sales unit (SU):	St
Unit package:	1.00
Shape:	square
Measures:	60 x 120 mm

mounting screws not supplied

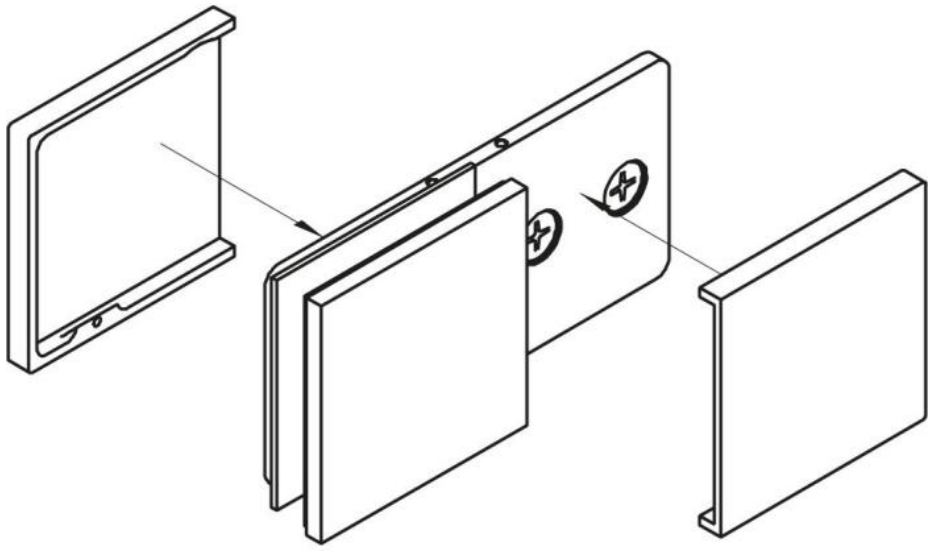

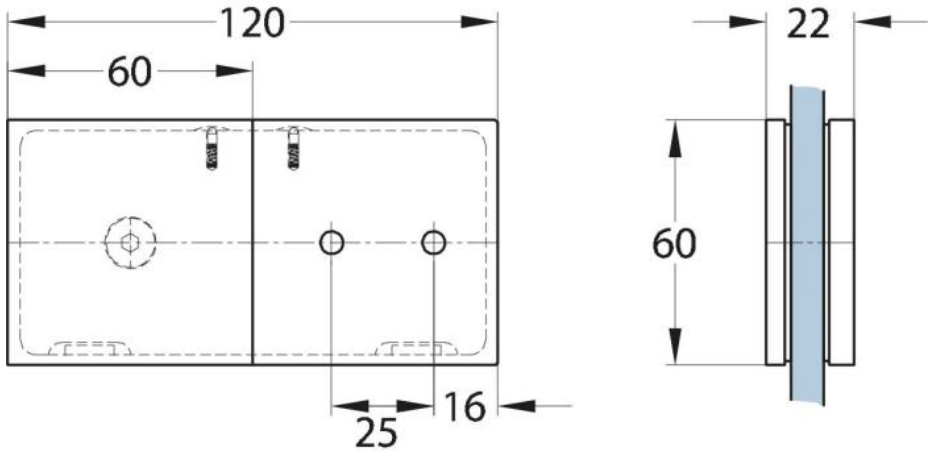
120
60
22
60
25
16

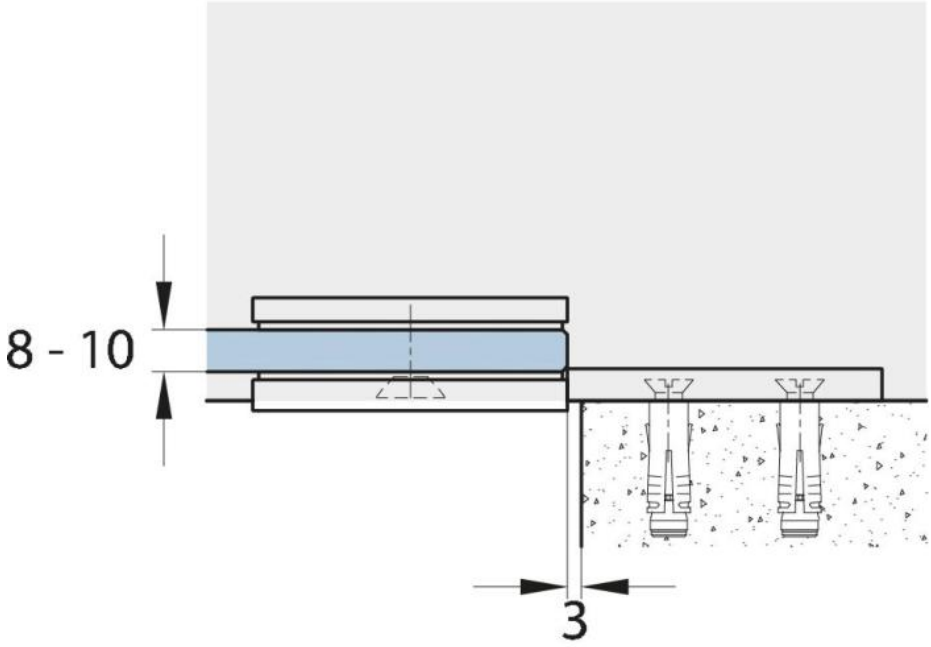
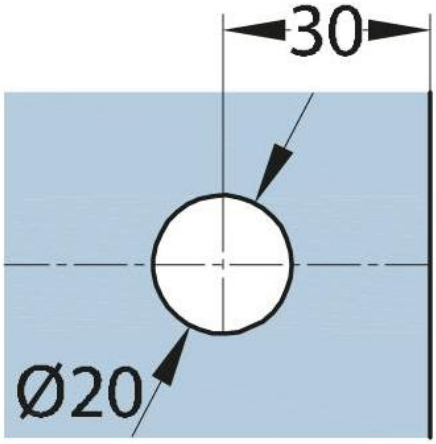
Glasbearbeitung