61.62230.02

Winkelverbinder

Material:	brass
Finish:	matt velour
Mounting:	glass/wall 90°
Glass thickness:	8 / 10 mm
Sales unit (SU):	St
Unit package:	1.00
Shape:	rounded off
Measures:	40 x 50 mm
Glass processing:	Glass drill hole : Ø14 mm

Montageschrauben werden nicht mitgeliefert

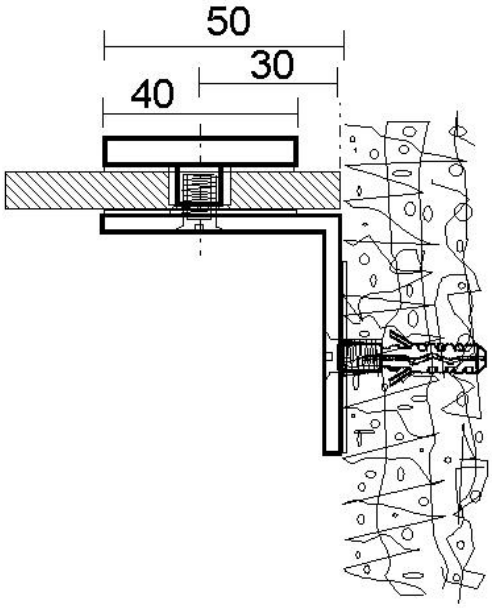
50
30
40

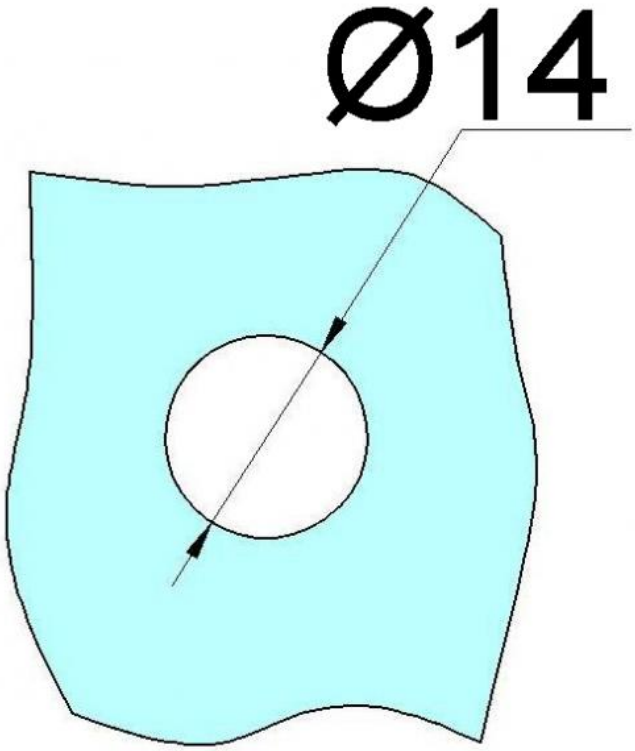
Ø14