# 62.34100.01

## Vitrinenscharnier

| | |
|---|---|
| Material: | brass |
| Finish: | chrome polished |
| Mounting: | glass/glass |
| Glass thickness: | 6 - 8 mm |
| Sales unit (SU): | St |
| Unit package: | 2.00 |
| Shape: | square |
| Glass processing: | Notch |
| Carrying capacity: | 15 kg/pair |

mit 2 Befestigungsschrauben, als Flach- und Winkelmontage verwendbar

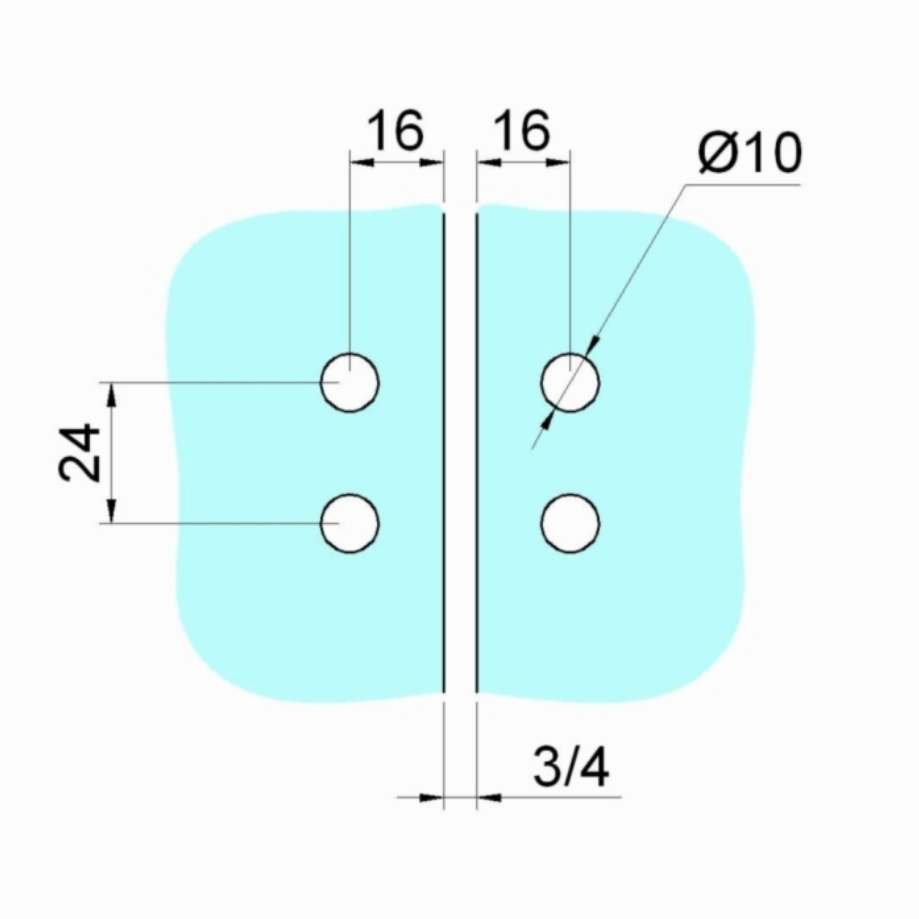
16
16
Ø10
24
3/4

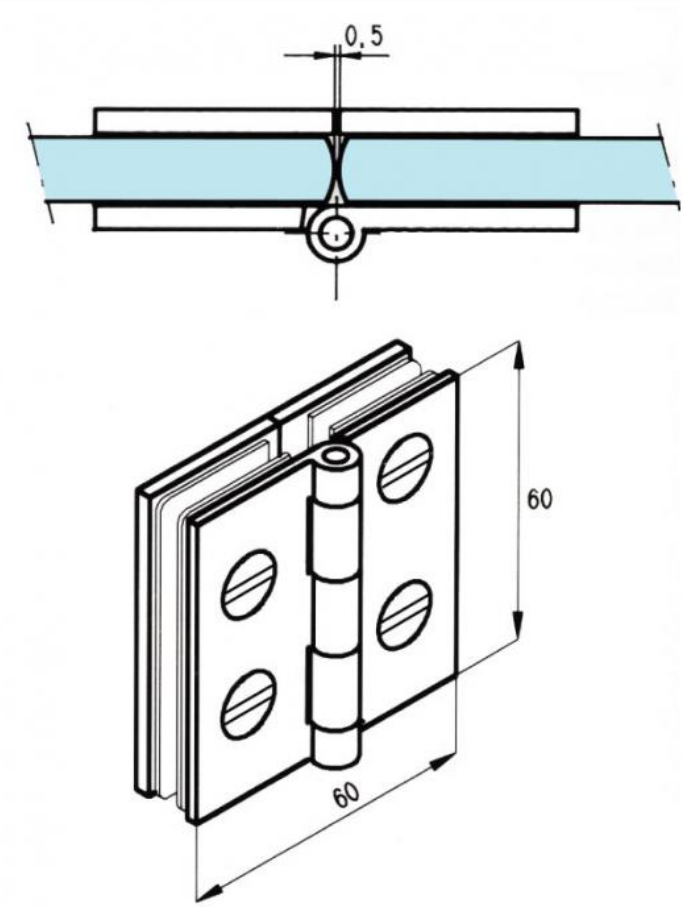
0,5
60
60