60.20030.25

Glass door hinge 8653, without catch

Material:	aluminium
Finish:	white
Mounting:	glass/wall 90°
Glass thickness:	8 - 10 mm
Sales unit (SU):	St
Unit package:	2.00
Shape:	square
Carrying capacity:	60 kg/pair

max. Flügeltürbreite 1000 mm

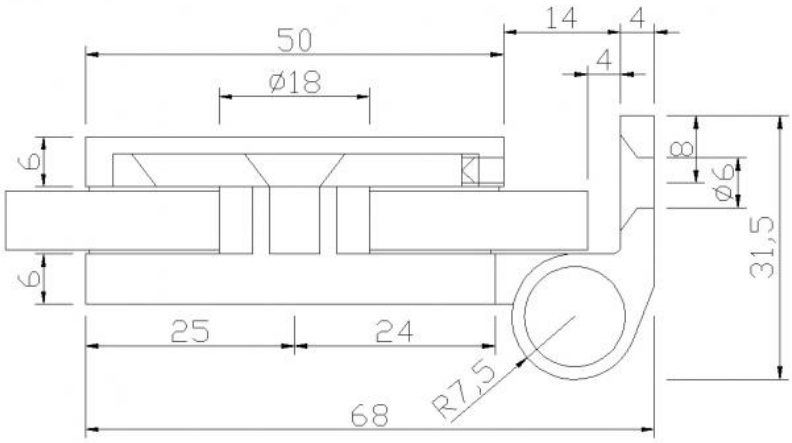
50
14
4
4
ø18
6
8
ø6
31,5
6
25
24
R7,5
68

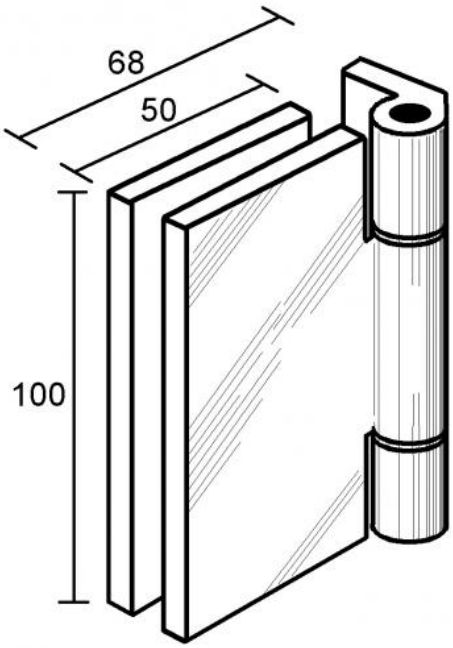
68
50
100

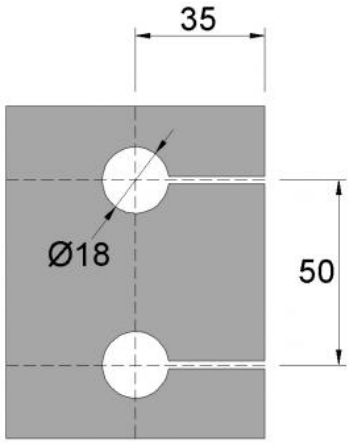
35
Ø18
50