61.62220.03

Winkelverbinder

Material:	brass
Finish:	golden polished
Mounting:	glass/glass 90°
Glass thickness:	8 / 10 mm
Sales unit (SU):	St
Unit package:	1.00
Shape:	round
Measures:	40 x 50 mm
Glass processing:	Glass drill hole : Ø14 mm

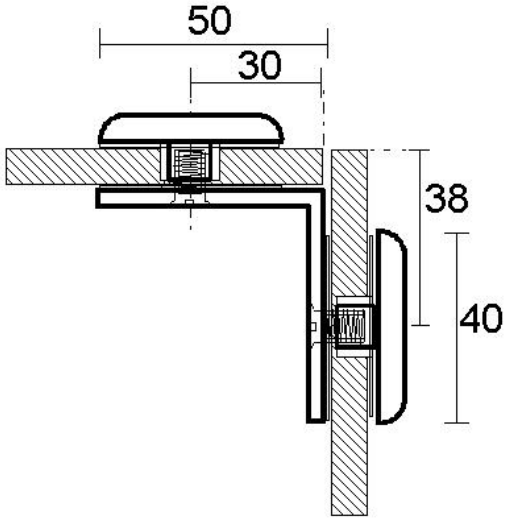
50
30
38
40

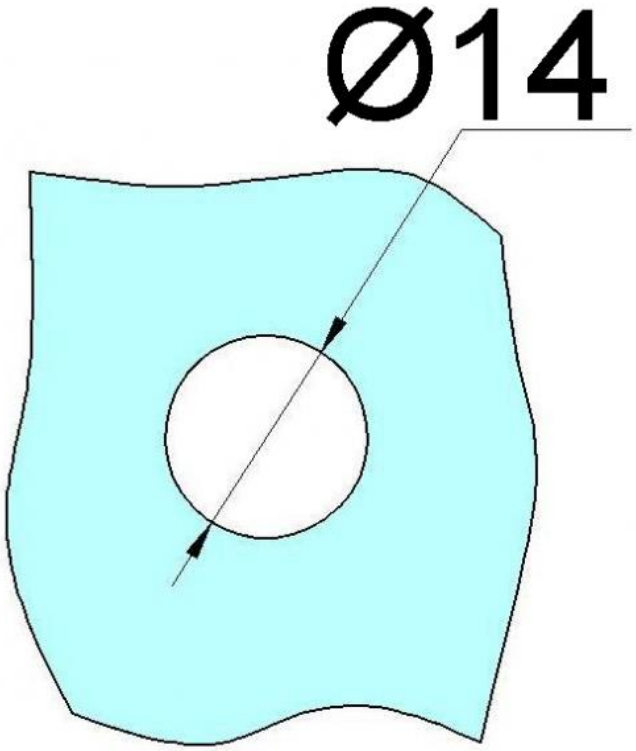
Ø14