61.62470.04

Angle connector Lenea

Material:	brass
Finish:	inox effect
Mounting:	glass/wall 90°
Glass thickness:	8 - 10 mm
Sales unit (SU):	St
Unit package:	2.00
Shape:	square
Measures:	90 x 45 mm
Glass processing:	Glass drill hole : Ø18 mm

Montageschrauben werden nicht mitgeliefert, passend zu Mélora eckig und Geneva

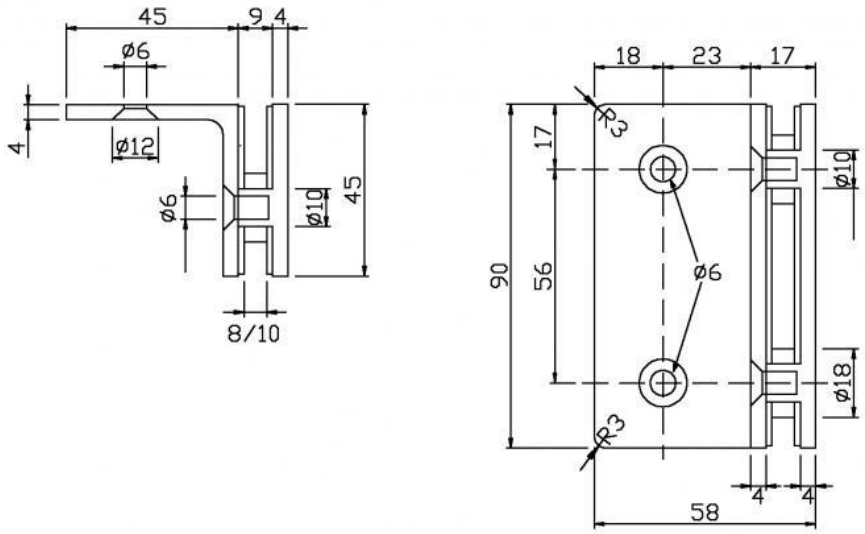
45
9
4
ø6
4
ø12
ø6
ø10
45
8/10
18
23
17
R3
17
ø10
90
56
ø6
ø18
R3
4
4
58

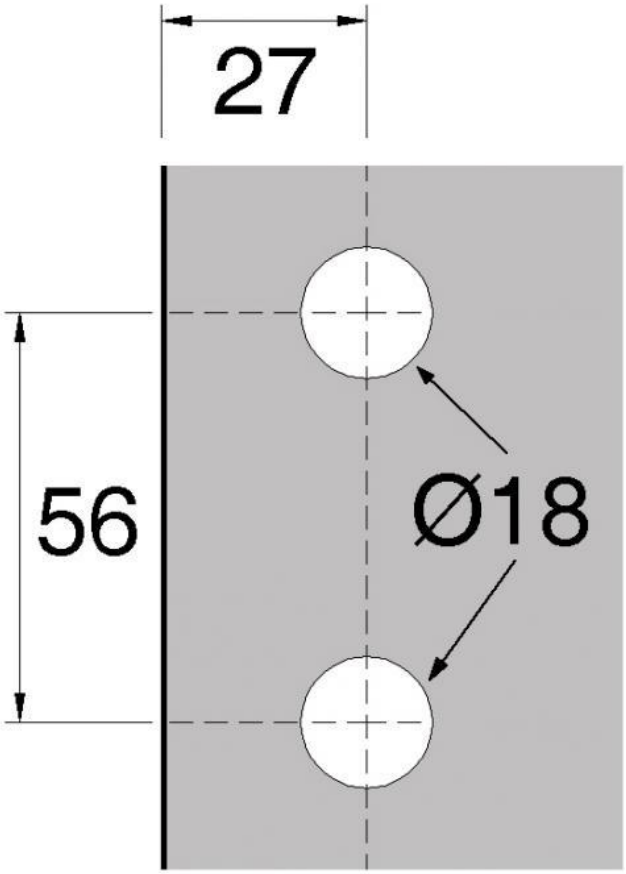
27
56
Ø18