61.62410.02

Flat connector Lenea Flex

Material:	brass
Finish:	matt velour
Mounting:	glass/glass 180°
Glass thickness:	8 - 10 mm
Sales unit (SU):	St
Unit package:	2.00
Shape:	rounded off
Measures:	90 x 93 mm
Glass processing:	Glass drill hole : Ø18 mm

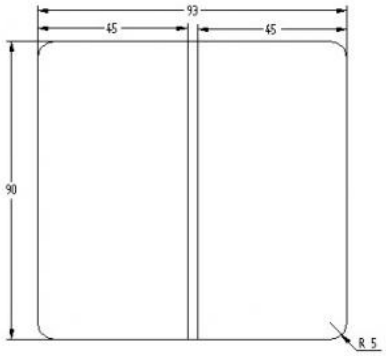

ECHELLE : 1

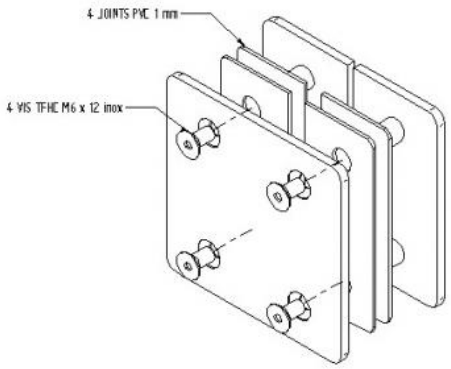
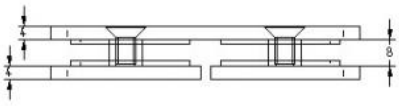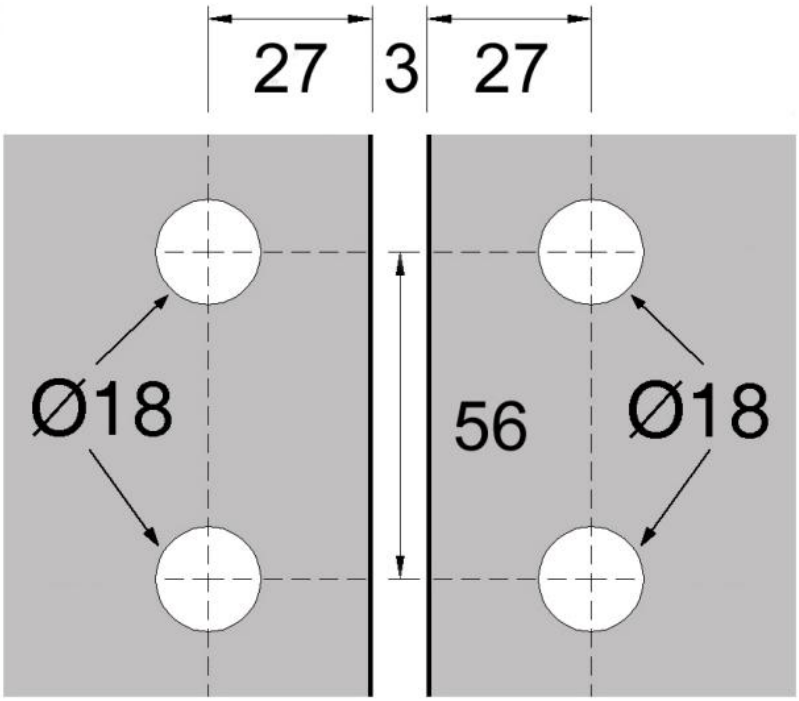
ECHELLE: 1:1.25